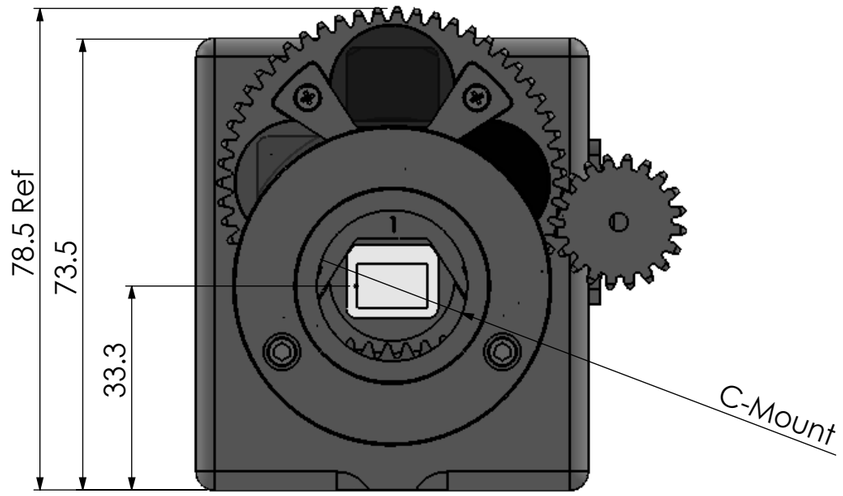

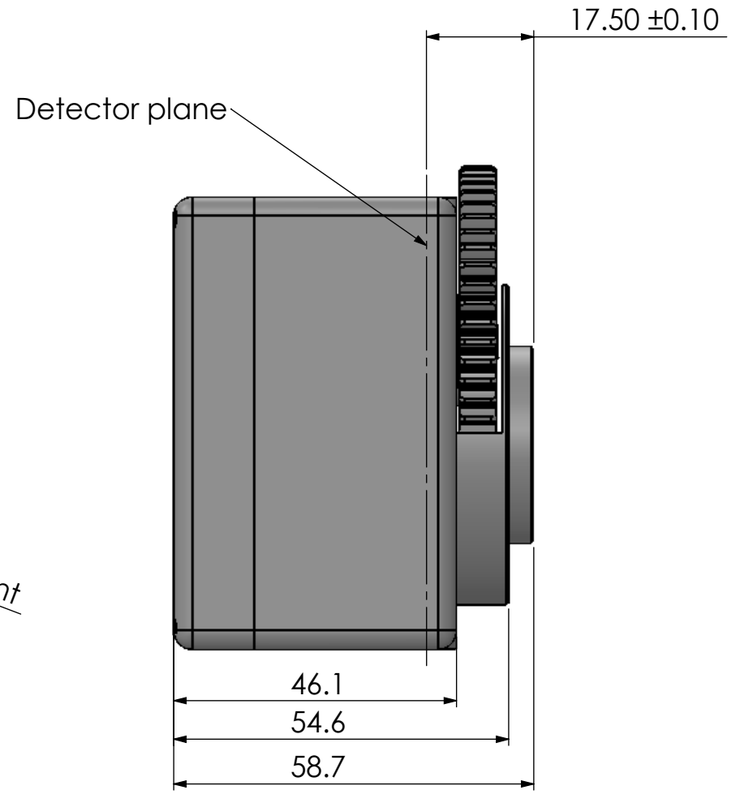

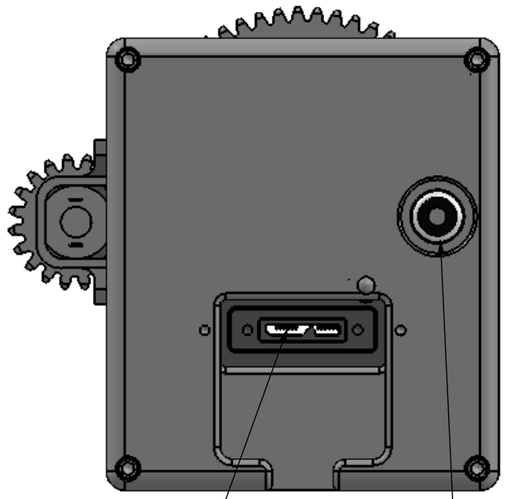

USB 3.0 Micro
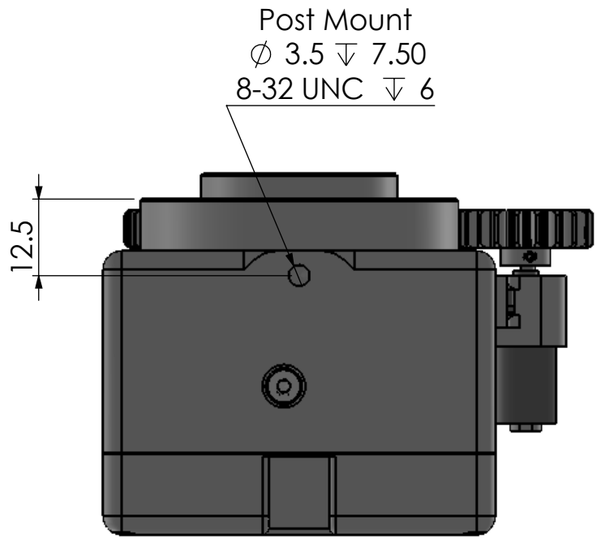
RCA Trigger In